INTRODUCTION TO SINGLE CARRIER FDMA

Hyung G. Myung

Qualcomm/Flarion Technologies
500 Somerset Corporate Blvd., Bridgewater, NJ 08807, USA
phone: +1-908-443-8085, fax: +1-908-947-7090, email: hmyung@qualcomm.com
web: http://hgmyung.googlepages.com/home

ABSTRACT

Single carrier frequency division multiple access (SC-FDMA) which utilizes single carrier modulation at the transmitter and frequency domain equalization at the receiver is a technique that has similar performance and essentially the same overall structure as those of an OFDMA system. One prominent advantage over OFDMA is that the SC-FDMA signal has lower peak-to-average power ratio (PAPR). SC-FDMA has drawn great attention as an attractive alternative to OFDMA, especially in the uplink communications where lower PAPR greatly benefits the mobile terminal in terms of transmit power efficiency. SC-FDMA is currently a working assumption for the uplink multiple access scheme in 3GPP Long Term Evolution (LTE).

In this paper, we give an in-depth overview of SC-FDMA with focus on physical layer and resource management aspects. We also show some research results on PAPR characteristics and channel-dependent resource scheduling of SC-FDMA.

1. INTRODUCTION

As wireless multimedia applications become more widespread, demand for higher data rate is leading to utilization of a wider transmission bandwidth. With a wider transmission bandwidth, frequency selectivity of the channel becomes more severe and thus the problem of inter-symbol interference (ISI) becomes more serious. In a conventional single carrier communication system, time domain equalization in the form of tap delay line filtering is performed to eliminate ISI. However, in case of a wide band channel, the length of the time domain filter to perform equalization becomes prohibitively large since it linearly increases with the channel response length.

One way to mitigate the frequency-selective fading seen in a wide band channel is to use a multicarrier technique which subdivides the entire channel into smaller sub-bands, or subcarriers. Orthogonal frequency division multiplexing (OFDM) is a multicarrier modulation technique which uses orthogonal subcarriers to convey information. In the frequency domain, since the bandwidth of a subcarrier is designed to be smaller than the coherence bandwidth, each subchannel is seen as a flat fading channel which simplifies the channel equalization process. In the time domain, by splitting a high-rate data stream into a number of lower-rate data stream that are transmitted in parallel, OFDM resolves the problem of ISI in wide band communications [1].

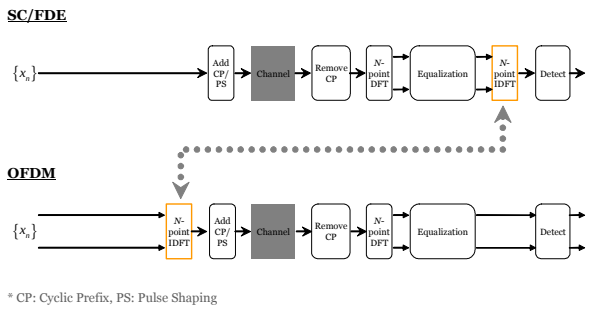

Figure 1 – SC/FDE and OFDM.

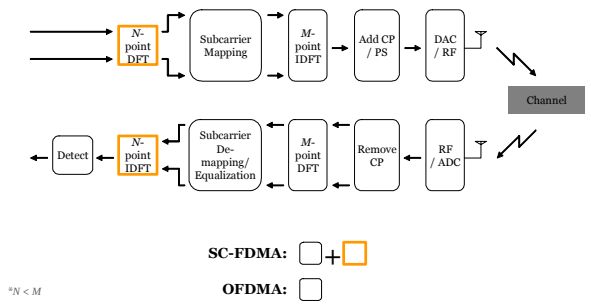

Figure 2 – A block diagram of an SC-FDMA system.

But OFDM has its disadvantages: High peak-to-average power ratio (PAPR), high sensitivity to frequency offset, and a need for an adaptive or coded scheme to overcome spectral nulls in the channel [2], [3].

In this correspondence, we give an in-depth overview of a single carrier FDMA (SC-FDMA) system, which is a newly developed multiple access scheme adopted in the uplink of 3GPP Long Term Evolution (LTE), and show some research results on its PAPR characteristics and resource scheduling.

The remainder of this paper is organized as follows: Section 2 gives an overview of single carrier with frequency domain equalization (SC/FDE). Section 3 overviews SC-FDMA in detail. Section 4 explains the SC-FDMA implementation in 3GPP LTE uplink. Section 5 characterizes the PAPR properties of SC-FDMA signals. Section 6 shows re-

search results of channel-dependent scheduling (CDS) of an uplink SC-FDMA system.

2. SINGLE CARRIER WITH FREQUENCY DOMAIN EQUALIZATION

Single carrier with frequency domain equalization (SC/FDE) technique is another way to fight the frequency-selective fading channel. It delivers performance similar to OFDM with essentially the same overall complexity, even for long channel delay [2], [3]. Figure 1 shows the block diagram of SC/FDE and compares it with that of OFDM.

Comparing the two systems in Figure 1, it is interesting to find the similarity between the two. Overall, they both use the same communication component blocks and the only difference between the two diagrams is the location of the IDFT block. Thus, one can expect the two systems to have similar link level performance and spectral efficiency.

Besides having a similar structure with OFDM, SC/FDE has advantages over OFDM as follows: Low PAPR due to single carrier modulation at the transmitter, robustness to spectral null, lower sensitivity to carrier frequency offset, and lower complexity at the transmitter which will benefit the mobile terminal in cellular uplink communications.

Single carrier FDMA (SC-FDMA) is an extension of SC/FDE to accommodate multi-user access.

3. OVERVIEW OF SC-FDMA

Figure 2 shows a block diagram of an SC-FDMA system. SC-FDMA can be regarded as DFT-spread orthogonal frequency division multiple access (OFDMA), where time domain data symbols are transformed to frequency domain by DFT before going through OFDMA modulation [4]. The orthogonality of the users stems from the fact that each user occupies different subcarriers in the frequency domain, similar to the case of OFDMA. Because the overall transmit signal is a single carrier signal, PAPR is inherently low compared to the case of OFDMA which produces a multi-carrier signal [5].

The transmitter of an SC-FDMA system first groups the modulation symbols into blocks each containing N symbols. Next it performs an N-point DFT to produce a frequency domain representation of the input symbols. It then maps each of the N-DFT outputs to one of the M ($> N$) orthogonal subcarriers that can be transmitted. If $N = M/Q$ and all terminals transmit N symbols per block, the system can handle Q simultaneous transmissions without co-channel interference. Q is the bandwidth expansion factor of the symbol sequence. As in OFDMA, an M-point IDFT transforms the subcarrier amplitudes to a complex time domain signal.

The transmitter performs two other signal processing operations prior to transmission. It inserts a set of symbols referred to as a cyclic prefix (CP) in order to provide a guard time to prevent inter-block interference (IBI) due to multi-path propagation. The transmitter also performs a linear filtering operation referred to as pulse shaping in order to reduce out-of-band signal energy. In general, CP is a copy of the last part of the block, which is added at the start of each block for a couple of reasons. First, CP acts as a guard time

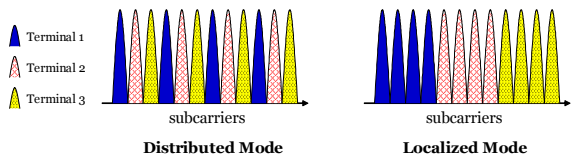

Figure 3 – Subcarrier allocation methods for multiple users (Q=3 users, M=12 subcarriers, and N=4 subcarriers allocated per user).

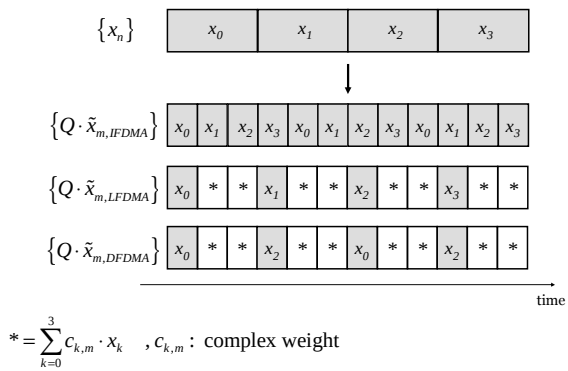

Figure 4 – Time symbols of different subcarrier mapping.

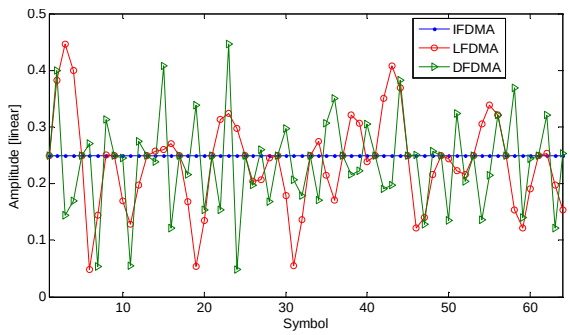

Figure 5 – Amplitude of SC-FDMA signals (no pulse shaping).

between successive blocks. If the length of the CP is longer than the maximum delay spread of the channel, or roughly, the length of the channel impulse response, then, there is no IBI. Second, since CP is a copy of the last part of the block, it converts a discrete time linear convolution into a discrete time circular convolution. Thus transmitted data propagating through the channel can be modelled as a circular convolution between the channel impulse response and the transmitted data block, which in the frequency domain is a point-wise multiplication of the DFT frequency samples. Then, to remove the channel distortion, the DFT of the received signal can simply be divided by the DFT of the channel impulse response point-wise or a more sophisticated frequency domain equalization technique can be implemented.

The receiver transforms the received signal into the frequency domain via DFT, de-maps the subcarriers, and then performs frequency domain equalization. Most of the well-known time domain equalization techniques, such as minimum mean square error (MMSE) equalization, decision fee-

dback equalization (DFE), and turbo equalization, can be applied to the frequency domain equalization. More details on the various frequency domain equalization methods are found in [6~11]. The equalized symbols are transformed back to the time domain via IDFT, and detection and decoding take place in the time domain.

3.1 Subcarrier Mapping

There are two methods to choose the subcarriers for transmission; *distributed* subcarrier mapping and *localized* subcarrier mapping.

In the distributed subcarrier mapping mode, DFT outputs of the input data are allocated over the entire bandwidth with zeros occupying the unused subcarriers, whereas consecutive subcarriers are occupied by the DFT outputs of the input data in the localized subcarrier mapping mode. We will refer to the localized subcarrier mapping mode of SC-FDMA as localized FDMA (LFDMA) and distributed subcarrier mapping mode of SC-FDMA as distributed FDMA (DFDMA). The case of $M = Q{\cdot}N$ for the distributed mode with equidistance between occupied subcarriers is called Interleaved FDMA (IFDMA) [12], [13]. IFDMA is a special case of SC-FMDA and it is very efficient in that the transmitter can modulate the signal strictly in the time domain without the use of DFT and IDFT. An example of SC-FDMA subcarrier mappings in the frequency domain for $N = 4$, $Q = 3$ and $M = 12$ is illustrated in Figure 3.

Depending on the subcarrier mapping method, the SC-FDMA modulated symbols in the time domain differ [14]. For IFDMA, the modulated time symbols are simply a repetition of the original input symbols with a scaling factor of $1/Q$ and some phase rotation. DFDMA and LFDMA have the same time symbol structure; they have exact copies of input time symbols with a scaling factor of $1/Q$ in the N-multiple sample positions and in-between values are sum of all the time input symbols in the input block with different complex-weighting. Because of this, we can expect to see more fluctuation and higher peak in amplitude for DFDMA and LFDMA. Figure 4 shows the time symbols for different subcarrier mapping schemes. Figure 5 shows the amplitude of the signal for each subcarrier mapping for $M = 64$, $N = 16$, $Q_{IFDMA} = 4$, and $Q_{DFDMA} = 3$ without pulse shaping and we can see more fluctuation and higher peak for LFDMA and DFDMA.

3.2 SC-FDMA and OFDMA

Figure 2 also shows a block diagram of an OFDMA transmitter. It has much in common with SC-FDMA. The only difference is the presence of the DFT in SC-FDMA. For this reason SC-FDMA is sometimes referred to as DFT-*spread* or DFT-*precoded* OFDMA. Other similarities between the two include: Block-based data modulation and processing, division of the transmission bandwidth into narrower subbands, frequency domain channel equalization process, and the use of CP.

However, there are distinct differences that make the two systems perform differently. In terms of data detection at the receiver, OFDMA performs it on a per-subcarrier basis

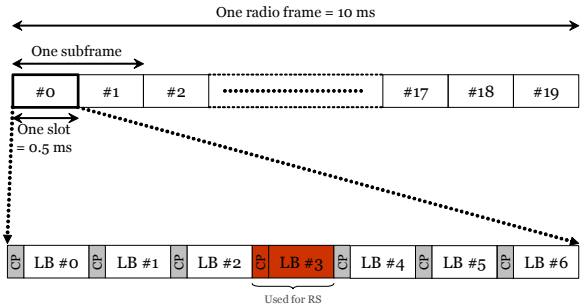

Figure 6 – Frame/slot structure in 3GPP LTE SC-FDMA uplink.

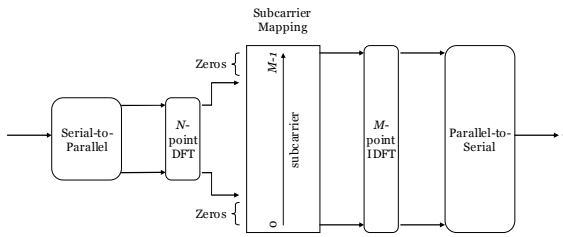

Figure 7 – Generation of a block in 3GPP LTE SC-FDMA uplink.

whereas SC-FDMA does it after additional IDFT operation. Because of this difference, OFDMA is more sensitive to a null in the channel spectrum and it requires channel coding or power/rate control to overcome this deficiency. Also, the duration of the modulated time symbols are expanded in the case of OFDMA with parallel transmission of the data block during the elongated time period whereas SC-FDMA modulated symbols are compressed into smaller chips with serial transmission of the data block, much like a direct sequence code division multiple access (DS-CDMA) system.

3.3 SC-FDMA and DS-CDMA

DS-CDMA with frequency domain equalization (DS-CDMA/FDE) is a technique that replaces the rake combiner, commonly used in the conventional DS-CDMA, with the frequency domain equalizer [15]. SC-FDMA is similar to DS-CDMA/FDE in terms of: Both spread narrow-band data into broader band, they achieve processing gain or spreading gain from spreading, and they both maintain low PAPR because of the single carrier transmission.

An interesting relationship between orthogonal DS-CDMA and IFDMA is that by exchanging the roles of spreading sequence and data sequence, DS-CDMA modulation becomes IFDMA modulation [16].

One advantage of SC-FDMA over DS-CDMA/FDE is that channel dependent resource scheduling is possible to exploit frequency selectivity of the channel.

4. SC-FDMA IMPLEMENTATION IN 3GPP LTE UPLINK

In this section, we describe the physical layer implementation of SC-FDMA in 3GPP LTE frequency division duplex (FDD) uplink according to [17] and [18].

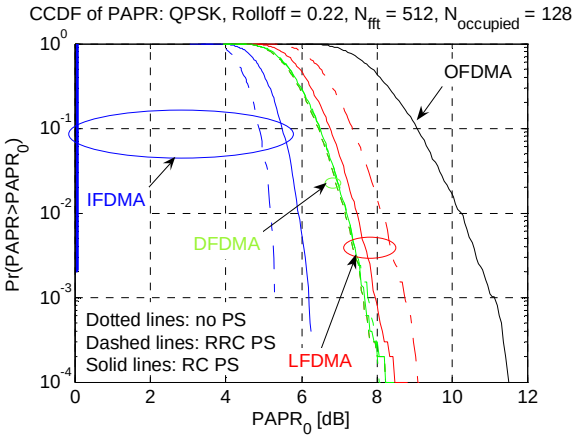

Figure 8 – Comparison of CCDF of PAPR for IFDMA, DFDMA, LFDMA, and OFDMA with total number of subcarriers M = 512, number of input symbols N = 128, IFDMA spreading factor 4, DFDMA spreading factor 2, QPSK, and α (roll-off factor) = 0.22.

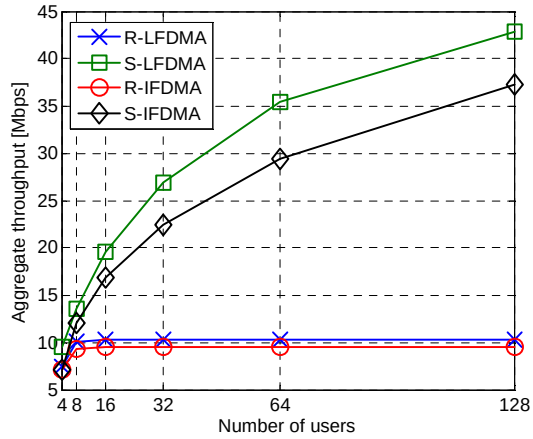

Figure 9 – Comparison of aggregate throughput with M = 256 system subcarriers, N = 8 subcarriers per user, bandwidth = 5 MHz, noise power per Hz = -160 dBm, and sum of user throughputs as the utility function.

In 3GPP LTE uplink, available data modulation schemes are QPSK and 16-QAM and turbo code based on 3GPP UTRA Release 6 is used for forward error correcting (FEC) code.

In the time domain, one radio frame has duration of 10 ms and it consists of 20 slots. Also, two slots comprise a subframe. One slot consists of 7 long blocks (LB) with CP. The middle LB is used for reference signal (RS), or pilot signal. Figure 6 illustrates the frame/slot structure. In the frequency domain, a resource block (RB) spans 12 subcarriers over one slot duration of 0.5 ms and one subcarrier has bandwidth of 15 kHz. Figure 7 shows the process of a block generation.

For subcarrier mapping, only localized subcarrier mapping is being considered and the frequency hopping of the subcarriers may be applied to achieve frequency diversity.

5. PEAK POWER CHARACTERISTICS OF SC-FDMA

PAPR is a performance measurement that is indicative of the power efficiency of the transmitter. In case of an ideal linear power amplifier where we achieve linear amplification up to the saturation point, we reach the maximum power efficiency when the amplifier is operating at the saturation point. A positive PAPR in dB means that we need a power backoff to operate in the linear region of the power amplifier and high PAPR degrades the transmit power efficiency performance.

Unlike OFDM, statistical properties of PAPR for single carrier modulations are not easily obtained analytically [19]. We thus resort to numerical analysis to investigate the PAPR properties.

Figure 8 is the result of Monte Carlo simulations. We calculate the CCDF (Complementary Cumulative Distribution Function) of PAPR, which is the probability that PAPR is higher than a certain PAPR value $PAPR_0$ ($Pr\{PAPR>PAPR_0\}$). We can see that all the cases for SC-FDMA have indeed lower PAPR than that of OFDMA. Also, IFDMA has the lowest PAPR, and DFDMA and LFDMA have very similar levels of PAPR.

6. CHANNEL-DEPENDENT SCHEDULING OF UPLINK SC-FDMA SYSTEMS

In wide band multi-user uplink communications, the channel gain of each user is different for different time and frequency subcarrier when the channels are uncorrelated among users. Time and frequency resources which are in deep fading for one user may be in excellent conditions for other users. The resource scheduler in the base station can assign the time-frequency resources to a favourable user which will increase the total system throughput [20], [21]. We term the class of this adaptive resource scheduling method as channel-dependent scheduling (CDS) which can greatly increase the spectral efficiency (bits/Hz).

Figure 9 is the results of computer simulations of SC-FDMA with 256 subcarriers spread over a 5 MHz band. They compare the effects of channel dependent subcarrier allocation with static (round-robin) scheduling for LFDMA and IFDMA. In the example, the scheduling took place with chunks containing 8 subcarriers and we assume perfect knowledge of the channel state information. The utility function is the sum of user throughputs. Each graph shows the aggregate throughput as a function of the number of simultaneous transmissions. The simulation results in the figure use the following abbreviations: R-LFDMA (static round robin scheduling of LFDMA), S-LFDMA (CDS of LFDMA), R-IFDMA (static round robin scheduling of IFDMA), and S-IFDMA (CDS of IFDMA).

Figure 9 shows that for throughput maximization (utility = bit rate), the advantage of channel dependent scheduling over round robin scheduling increases as the number of users increases. This is because the scheduler selects the closer users who can transmit at higher data rate. If there are more users, the possibility of locating users at closer distance to the base station increases. As a result, the CDS achieves signifi-

cant improvements for both IFDMA and LFDMA. Comparing LFDMA and IFDMA, the capacity gain from scheduling for LFDMA is higher because it has higher frequency-selective gain.

7. CONCLUSIONS

Single carrier FDMA (SC-FDMA) which utilizes single carrier modulation at the transmitter and frequency domain equalization at the receiver is a technique that has similar performance and essentially the same overall structure as those of an OFDMA system. SC-FDMA has been adopted as the uplink multiple access scheme in 3GPP Long Term Evolution (LTE) mainly due to its low peak-to-average power ratio (PAPR) which greatly improves the transmit power efficiency [22].

In this paper, we gave an in-depth overview of SC-FDMA with focus on physical layer and resource management aspects. We also showed some research results on peak power characteristics and channel-dependent resource scheduling of SC-FDMA. Two different categories of subcarrier mapping methods, localized and distributed, give the system designer the flexibility to adapt to the different radio environments.

REFERENCES

[1] R. van Nee and R. Prasad, *OFDM for Wireless Multimedia Communications*, Artech House, 2000.

[2] H. Sari, G. Karam, and I. Jeanclaude, "Transmission Techniques for Digital Terrestrial TV Broadcasting," *IEEE Commun. Mag.*, vol. 33, no. 2, pp. 100-109, Feb. 1995.

[3] D. Falconer, S. L. Ariyarisitakul, A. Benyamin-Seeyar, and B. Eidson, "Frequency Domain Equalization for Single-Carrier Broadband Wireless Systems," *IEEE Commun. Mag.*, vol. 40, no. 4, pp. 58-66, Apr. 2002.

[4] H. G. Myung, J. Lim, and D. J. Goodman, "Single Carrier FDMA for Uplink Wireless Transmission," *IEEE Vehicular Technology Mag.*, vol. 1, no. 3, pp. 30 – 38, Sep. 2006.

[5] H. G. Myung, J. Lim, and D. J. Goodman, "Peak-to-average Power Ratio of Single Carrier FDMA Signals with Pulse Shaping", *Proc. IEEE International Symposium on Personal, Indoor and Mobile Radio Communications (PIMRC) 2006*, Sep. 2006.

[6] G. K. Kaleh, "Channel Equalization for Block Transmission Systems," *IEEE J. Select. Areas Commun.*, vol. 13, no. 1, pp. 110-121, Jan. 1995.

[7] M. V. Clark, "Adaptive Frequency-Domain Equalization and Diversity Combining for Broadband Wireless Communications," *IEEE J. Sel. Areas Commun.*, vol. 16, no. 8, pp. 1385-1395, Oct. 1998.

[8] M. Tüchler and J. Hagenauer, "Linear Time and Frequency Domain Turbo Equalization," *Proc. IEEE 53rd Veh. Technol. Conf. (VTC)*, vol. 2, pp. 1449-1453, May 2001.

[9] R. Dinis, D. Falconer, C. T. Lam, and M. Sabbaghian, "A Multiple Access Scheme for the Uplink of Broadband Wireless Systems," *Proc. IEEE GLOBECOM '04*, vol. 6, Dallas, TX, pp. 3808-3812, Dec. 2004.

[10] F. Pancaldi and G. M. Vitetta, "Block Channel Equalization in the Frequency Domain," *IEEE Trans. Commun.*, vol. 53, no. 3, pp. 463-471, Mar. 2005.

[11] N. Benvenuto and S. Tomasin, "Iterative Design and Detection of a DFE in the Frequency Domain," *IEEE Trans. Commun.*, vol. 53, no. 11, pp. 1867-1875, Nov. 2005.

[12] U. Sorger, I. De Broeck, and M. Schnell, "Interleaved FDMA - A New Spread-Spectrum Multiple-Access Scheme," *Proc. IEEE ICC '98*, Atlanta, GA, pp. 1013-1017, Jun. 1998.

[13] M. Schnell and I. De Broeck, "Application of IFDMA to Mobile Radio Transmission," *Proc. IEEE 1998 International Conference on Universal Personal Communications (ICUPC '98)*, Florence, Italy, pp. 1267-1272, Oct. 1998.

[14] H. G. Myung, "Single Carrier Orthogonal Multiple Access Technique for Broadband Wireless Communications," Ph.D. Dissertation, Polytechnic University, Brooklyn, NY, Jan. 2007.

[15] F. Adachi, D. Garg, S. Takaoka, and K. Takeda, "Broadband CDMA Techniques," *IEEE Wireless Comm.*, vol. 12, no. 2, pp. 8-18, Apr. 2005.

[16] C. Chang and K. Chen, "Frequency-Domain Approach to Multiuser Detection over Frequency-Selective Slowly Fading Channels," *IEEE International Symposium on Personal, Indoors and Mobile Radio Communications (PIMRC) 2002*, Lisboa, Portugal, pp. 1280-1284, Sep. 2002.

[17] 3GPP TR 25.814 – 3GPP; Technical Specification Group Radio Access Network; Physical Layer Aspects for Evolved Universal Terrestrial Radio Access (UTRA) (Release 7)

[18] 3GPP TR 36.201 – 3GPP; Technical Specification Group Radio Access Network; LTE Physical Layer - General Description (Release 8)

[19] D. Wulich and L. Goldfeld, "Bound of the Distribution of Instantaneous Power in Single Carrier Modulation," *IEEE Trans. Wireless Commun.*, vol. 4, no. 4, pp. 1773–1778, Jul. 2005.

[20] J. Lim, H. G. Myung, K. Oh, and D. J. Goodman, "Proportional Fair Scheduling of Uplink Single-Carrier FDMA Systems," *The 17th Annual IEEE International Symposium on Personal, Indoor and Mobile Radio Communications (PIMRC '06)*, Helsinki, Finland, Sep. 2006.

[21] J. Lim, H. G. Myung, K. Oh, and D. J. Goodman, "Channel-Dependent Scheduling of Uplink Single Carrier FDMA Systems," *IEEE Vehicular Technology Conference (VTC) 2006 Fall*, Montreal, Canada, Sep. 2006.

[22] H. Ekström, A. Furuskär, J. Karlsson, M. Meyer, S. Parkvall, J. Torsner, and M. Wahlqvist, "Technical Solutions for the 3G Long-Term Evolution," *IEEE Commun. Mag.*, vol. 44, no. 3, pp. 38-45, Mar. 2006.